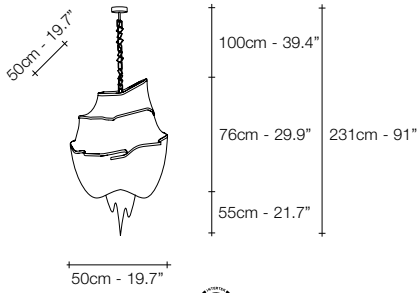

A13S

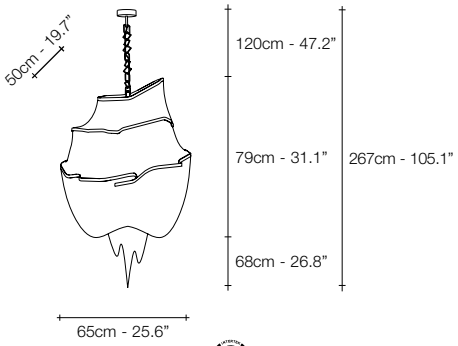

A14S

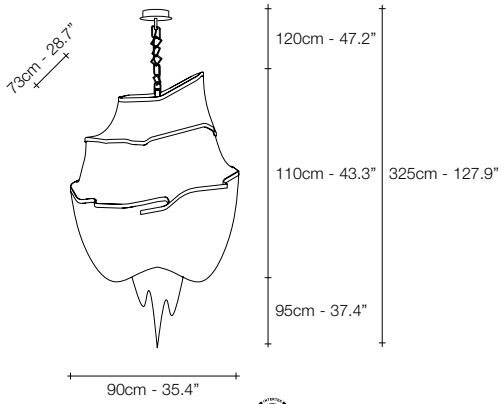

A15S

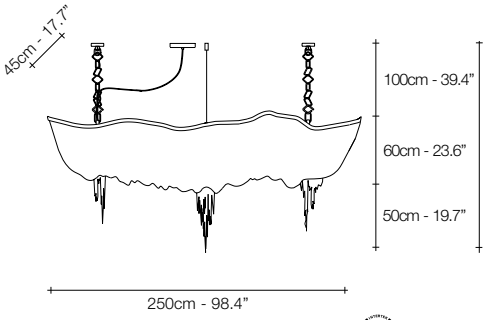

A16S

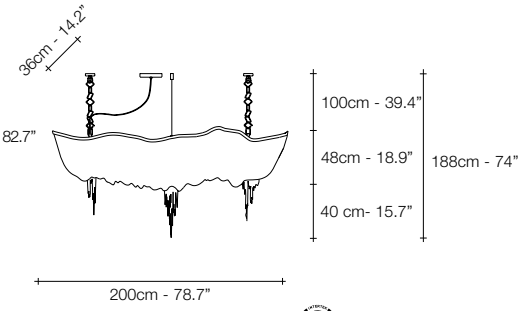

A17S

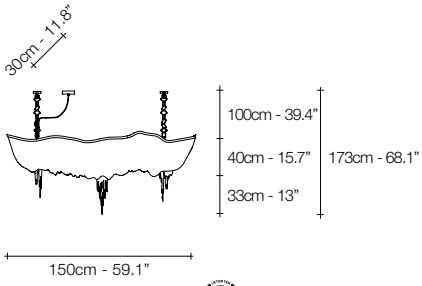

A18S

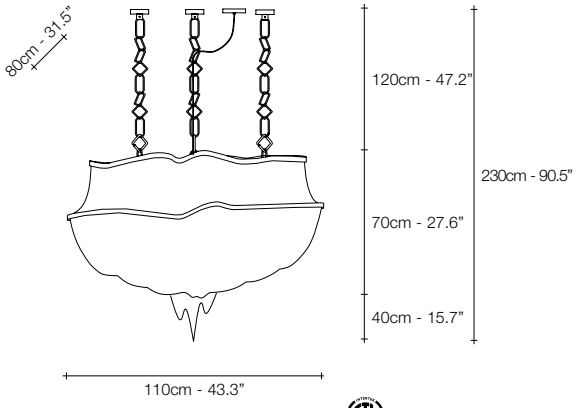

J01S

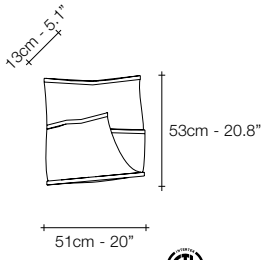

J03A

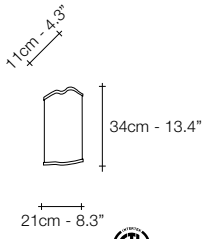

J04A

NICKEL

BLACK NICKEL

BRONZE

GOLD

CHAMPAGNE

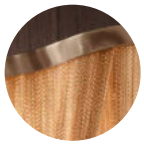
BRUSHED CHAMPAGNE

RECOMMENDED BULB		A13S	A14S	A15S	A16S	A17S	A18S	J01S	J03A	J04A
230V	E14 LED	6x6W	8x6W	8x6W	10x6W	10x6W	8x6W	8x6W	4x6W	2x6W
Dimmable with all systems		-	-	-	-	-	-	-	-	-
120V	E12 LED	6x5.5W	8x5.5W	8x5.5W	10x5.5W	10x5.5W	8x5.5W	10x5.5W	4x5.5W	2x5.5W
Dimmable with all systems		-	-	-	-	-	-	-	-	-